HAND TELEPHONE SETS

HANGING TYPE

CONNECTIONS

*SPECIFICATION CANCELED
Information included in
BSRS-361.203

This index lists the information that forms a part of, or supplements this specification, and indicates the authorized issues thereof.

PAGE 1 , ISSUE	1	2	3	4	5*								
DATE	7-54	12-55	1-57	12-57	7-72								
NUMBER	ISSUES AUTHORIZED ON ABOVE DATE												TITLE
Page 2	1	2	3										
ATT DWGS													
ESL738869	2												201A, B, C, D Sets - Conn
ESL738870	3												211A, B, C, D Sets - Conn
ESL738871	3			4									212A, B, C Sets - Conn
ESL738872	2												211E, F, G, H Sets - Conn
ESL738873	3			4									214A, B, C, D Sets - Conn
ESL738874	3												213A, B, C Sets - Conn
LA540287		1	2										211 J, L, M Sets - Conn
LA540288		1	2										212 L, M Sets - Conn
LA567970			1										211 N, P Sets - Conn
LA700897	3												213E Set - Conn
LA701792	2												117A, C Sets - Conn

b—The D Series Bell System Practice of the same number shall be used until the BSRS is available.
c—Information in accordance with that currently authorized.

Bell Telephone Laboratories, Incorporated - Dept 3331-RSL/JAM-512, Indpls. Printed in U.S.A.

1. GENERAL

1.01 This specification covers the connections for the hand telephone sets (hanging type) that are listed in Table A.

1.02 Omitted on issue 2 of this page.

2. REQUIREMENTS

2.01 The sets covered by this specification shall be connected as shown on the drawings listed in Table A, except in the case of 211L, 211M, 211P, 212L, and 212M sets equipped with a 61M filter. On sets of the latter description, the connections will vary from those of the applicable drawing. These variations are covered in Table B.

TABLE A

Hand Telephone Sets - Connection Drawings

Code No.	Dwg No.	Note	Code No.	Dwg No.	Note
117A & C	LA701792	1	212A, B, & C	ESL738871	
201A, B, C, & D	ESL738869		212L & M	LA540288	1
211A, B, C, & D	ESL738870		213A, B, & C	ESL738874	
211E, F, G, & H	ESL738872		213E	LA700897	1 2
211J, L, & M	LA540287	1 3	214A, B, C, & D	ESL738873	
211N & P	LA567970	1 4			

Notes

1 The wiring shown in broken lines is not part of the hand telephone sets.

2 The left figure applies to the 213E set.

3 The right upper figure applies to 211J sets and the right lower figure applies to 211L and M sets.

4 The right upper figure and the right lower figure apply to 211N and P sets respectively.

TABLE B

Code No. of Set	Strapping Lead Omitted	Termination of Filter Leads		
		Yellow	Red	Black
211L, 211M, 212L & 212M	Black-between term. Y of dial and term. BK of mtg	Term. Y of dial	Term. BK of mtg	Term. BK of dial
211P	Green-between term. G of dial and term. 1 of mtg	Term. G of dial	Term. 1 of mtg	Term. BL of dial

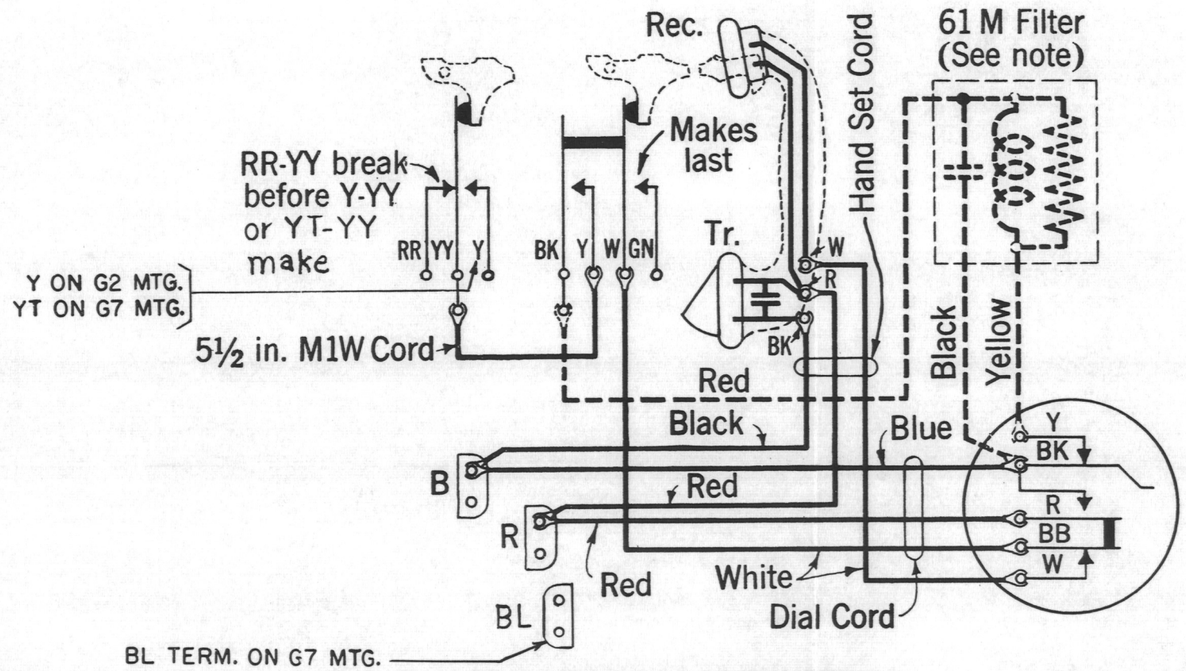

Note:- If filter is not provided connect BK mounting contact to Y of dial with a 5½ inch M1W cord.

USED ON	DWG.

● DENOTES MANUFACTURE DISCONTINUED

212 A,B,C
HAND TELEPHONE SETS

CONNECTING DIAGRAM

SCALE ~

DRAWN | APPROVED
CHECKED

WESTERN ELECTRIC CO. INC.
ENGINEER OF MANUFACTURE

LA-

L

ESL-738871 A

ISSUE

ISSUE 1 11-22-37
MIW WAS MIE CORD.
M.O. C.D.H.
ISSUE 2 4-19-38
IN TITLE B.S.P. D353.212 WAS SPEC.
L.M. R.H.F. C.J.H.
ISSUE 3 6-25-54 A.J.K.
YT & BL TERMS. ON G7 MTG. WERE NOT SPEC. OR SHOWN. "OR YT-YY" WAS NOT SPEC. FOR LEFT SPRING COMBINATION. IN TITLE:- 212 A,B,C WAS NOT SPECIFIED.
FEB
ISSUE 4 11-4-57

APP'LS
DR N.O. CH. ENG W.L.B.

BELL TELEPHONE LABORATORIES, INC.
NEW YORK

ESL-738871

LA-

LA-

DIMENSIONS UP TO AND INCLUDING 72 INCHES EXPRESSED IN INCHES

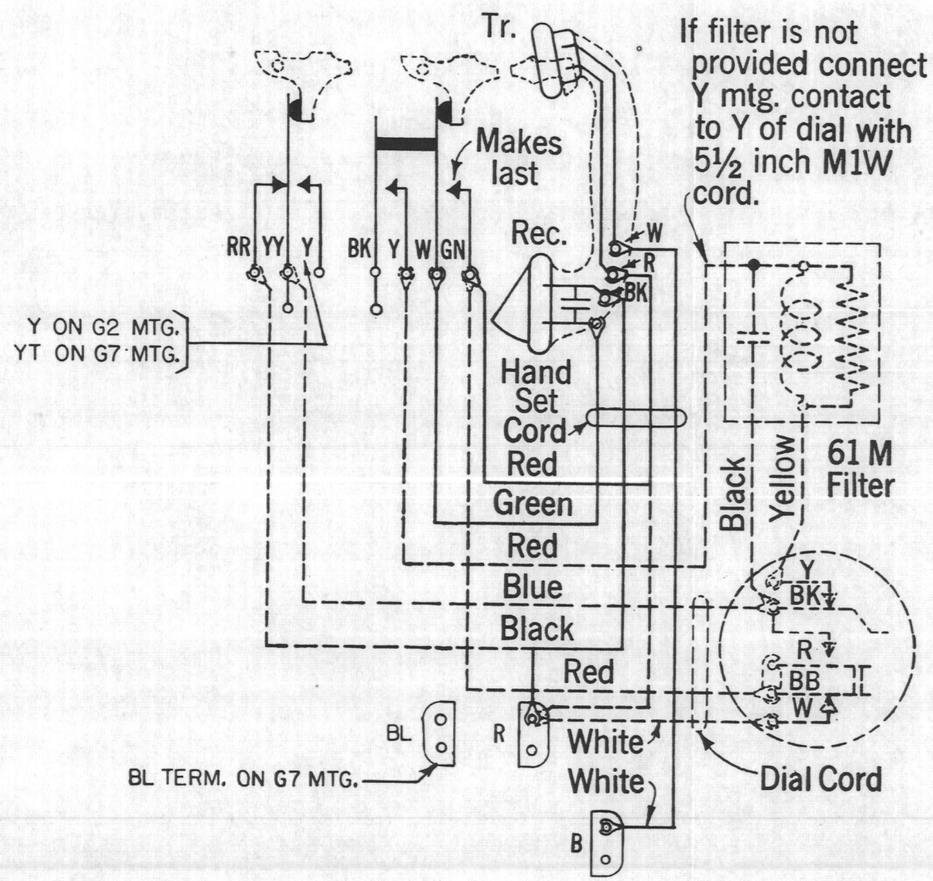

LA-

DIMENSIONS UP TO AND INCLUDING 72 INCHES EXPRESSED IN INCHES

ESL-738873 A-
ISSUE

ISSUE 1 11-22-37
MIW WAS MIE CORD.
M.D. C.D.
ISSUE 2 1-19-38
IN TITLE B.S.P. D353-214 WAS SPEC.
L.M. R.K.T. C.A.
ISSUE 3 6-25-54 U.Y.K.
YT & BL TERMS. ON G7 MTG. WERE NOT SPECIFIED OR SHOWN. IN TITLE:- 204 A,B,C,D WAS NOT SPECIFIED.
F.E.D. F.R.B.
ISSUE 4 11-4-57

USED ON	DWG.
● DENOTES MANUFACTURE DISCONTINUED	

214 A,B,C,D
HAND TELEPHONE SETS

CONNECTIONS DIAGRAM

SCALE ~

DRAWN | APPROVED
CHECKED

WESTERN ELECTRIC CO. INC.
ENGINEER OF MANUFACTURE

LA-

L

APP'LS
DR M.D. CH. ENG W.L.B.

BELL TELEPHONE LABORATORIES, INC.
NEW YORK

ESL-738873

LA-

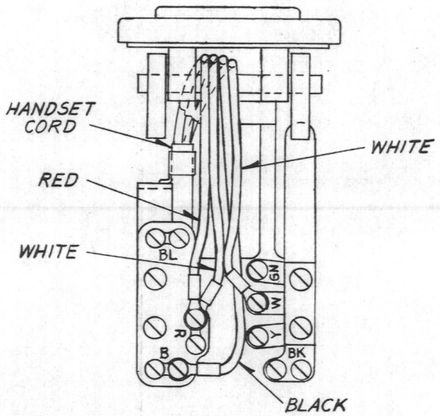

FIG. 1
CORDING FOR MANUAL SERVICE

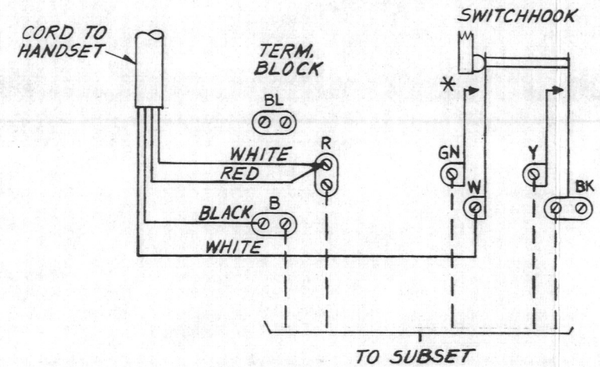

CONNECTIONS FOR MANUAL SERVICE

* GN-W MAKE LAST BREAK FIRST.

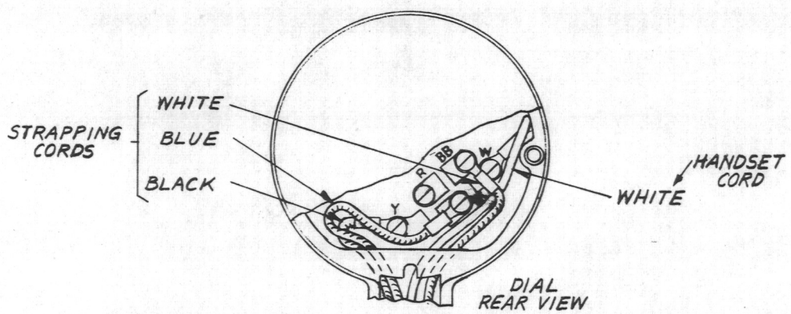

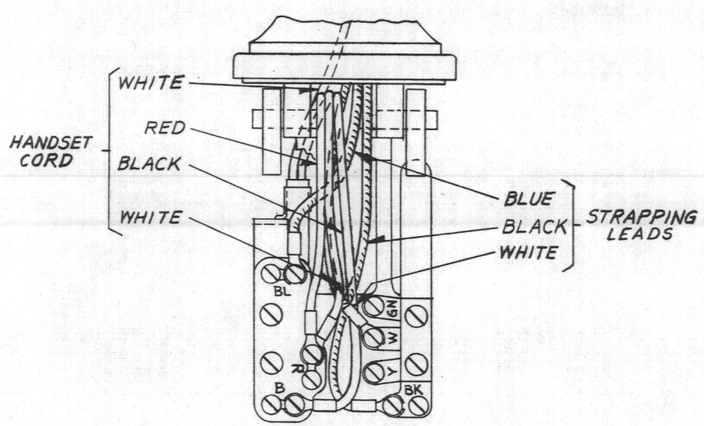

FRONT VIEW

FIG. 2
CORDING FOR DIAL SERVICE

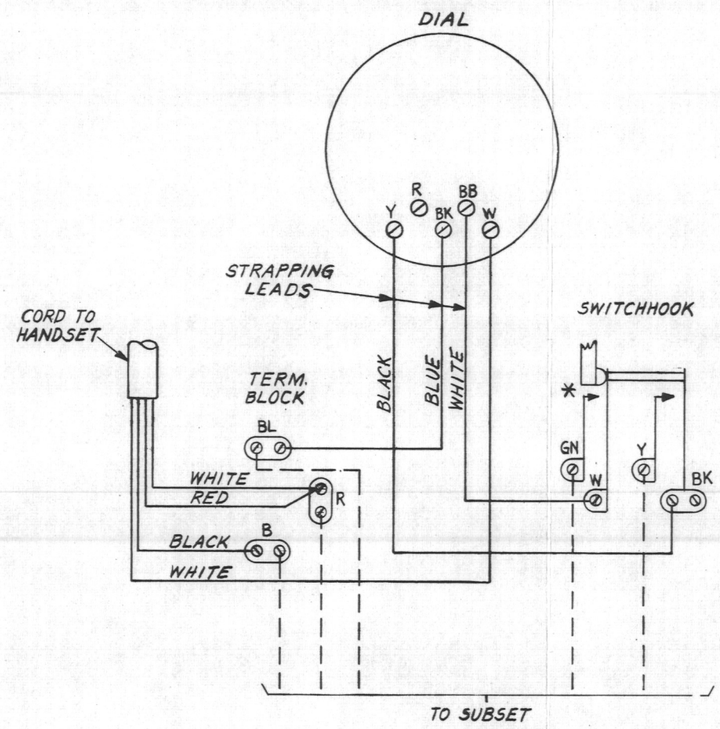

CONNECTIONS FOR DIAL SERVICE

A-

ENGR. G.L. PORTER		6-C.B.	C.A.J.
DRAWN C.J. YUNGER		C.J.Y.	C.L.B.
ISSUE 1	1-20-55	A.G.K.	
ADDED: TO TITLE, "211M."			
CAH			C.L.B.
EIR-211MR-3 HAND TEL. SET			
ISSUE 2	4-4-56		

ISSUE 2 LA-540287

211J, 211L & 211M HAND TEL. SET CORDING AND WIRING DIAGRAM

SCALE ~

WESTERN ELECTRIC CO, INC ENGINEER OF MANUFACTURE

BELL TELEPHONE LABORATORIES, INC

DIMENSIONS UP TO AND INCLUDING 72 INCHES EXPRESSED IN INCHES. NON-LIMITED DIMENSIONS, OTHER THAN SIZE OF RAW MATERIAL, SHALL BE HELD WITHIN FRACTIONAL DECIMAL

DWG SIZE 4S

LA-540287

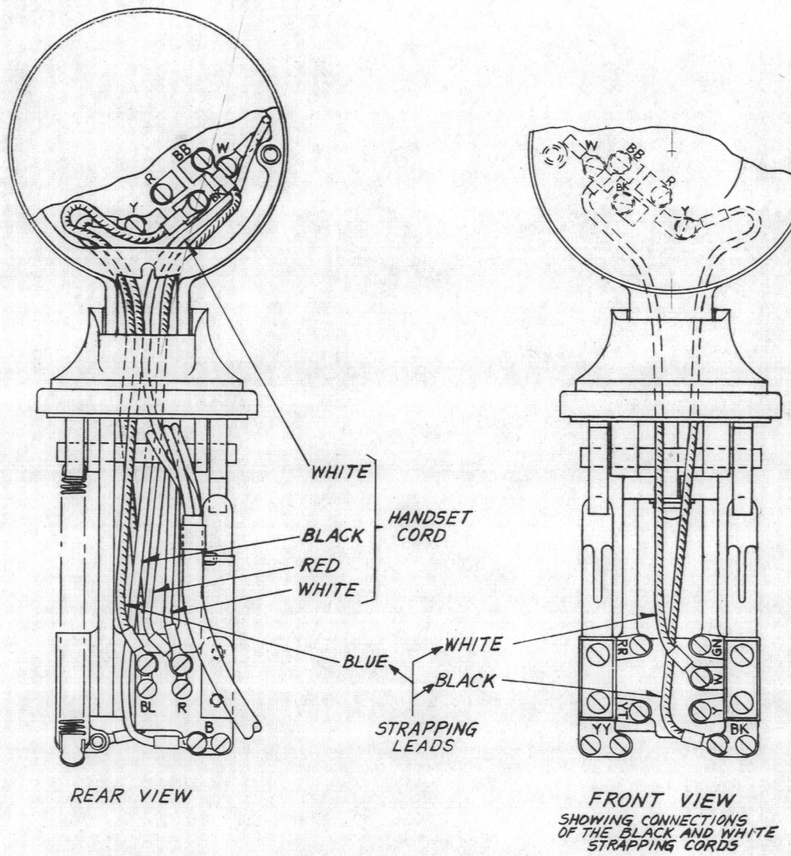

FIG. 1
METHOD OF CORDING

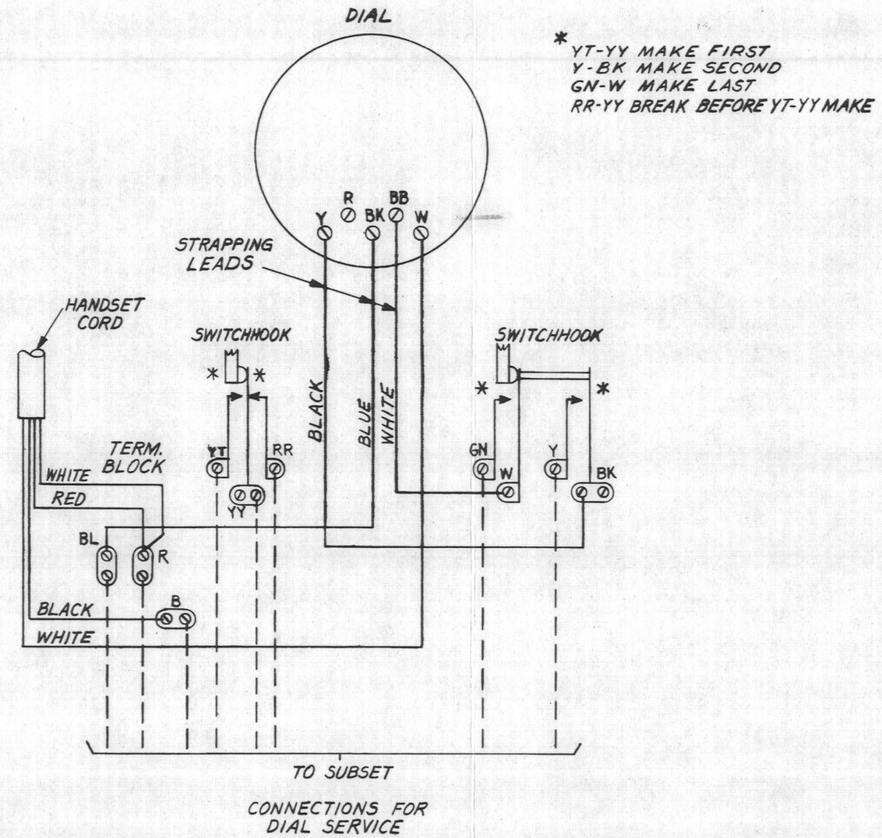

CONNECTIONS FOR DIAL SERVICE

A-

ENGR. R.C. PORTER	HTC	RCP	C.A.J.
DRAWN C.J. YUNGER	C.J.Y.		C.L.B.
ISSUE 1	1-20-55		A.G.K.
ADDED: "& M" IN TITLE BOX.			
M.D.H.			C.L.B.
EIR-212 NR-3 HAND TEL SET			
ISSUE: 2	4-4-56		

ISSUE 2 LA-540288

212 L&M HAND TEL. SET CORDING AND WIRING DIAGRAM

SCALE ~

WESTERN ELECTRIC CO. INC
ENGINEER OF MANUFACTURE

BELL TELEPHONE LABORATORIES, INC

DIMENSIONS UP TO AND INCLUDING 72 INCHES EXPRESSED IN INCHES. NON-LIMITED DIMENSIONS. OTHER THAN SIZE OF RAW MATERIAL, SHALL BE HELD WITHIN FRACTIONAL DECIMAL

DWG SIZE 4S

LA-540288

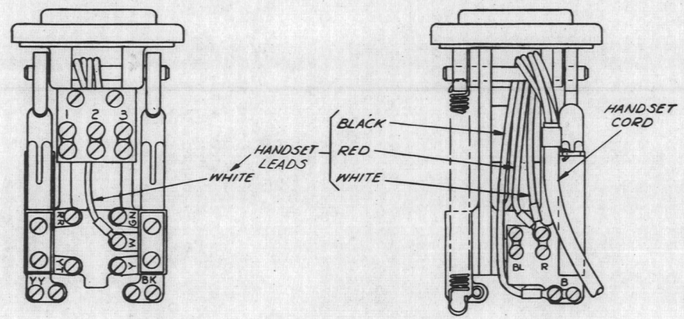

FIG. 1
CORDING FOR MANUAL SERVICE

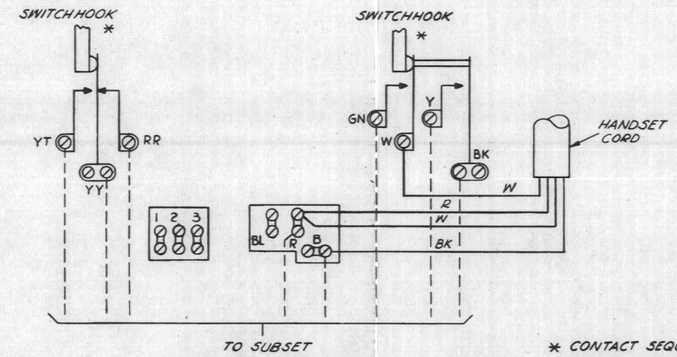

CONNECTIONS FOR MANUAL SERVICE

* CONTACT SEQUENCE

REMOVING HANDSET
1. YT-YY MAKES
2. Y-BK MAKES
3. GN-W MAKES

RESTORING HANDSET
1. GN-W BREAKS
2. Y-BK BREAKS
3. RR-YY MAKES BEFORE YT-YY BREAKS

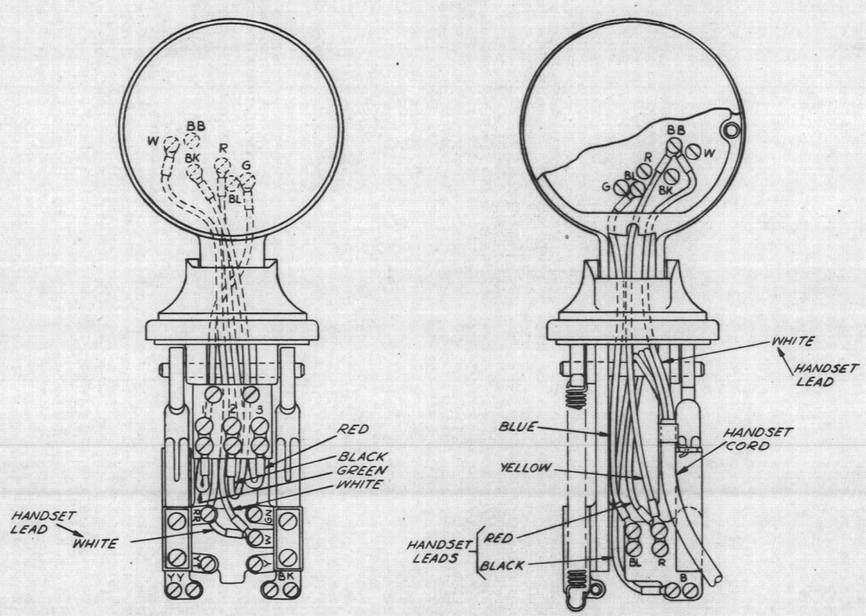

FIG. 2
CORDING FOR DIAL SERVICE

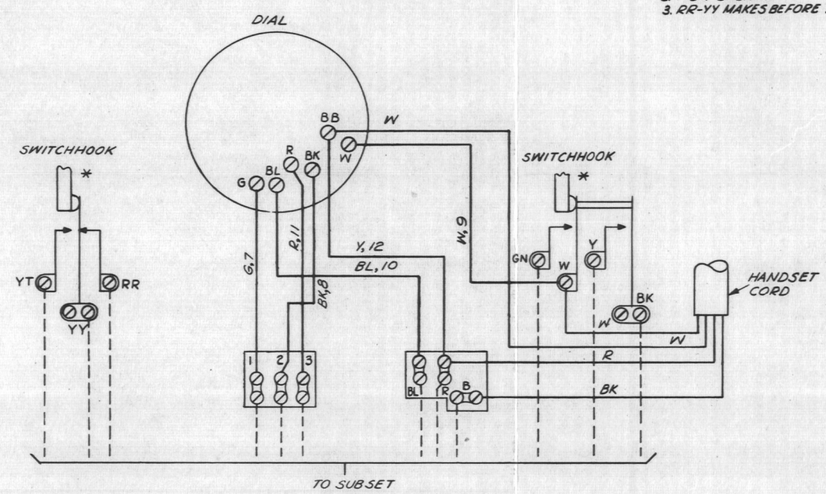

CONNECTIONS FOR DIAL SERVICE

NOTE:
1. ITEM NUMBERS REFERRED TO ARE SPECIFIED IN STOCK LIST OF ASSEMBLY DRAWING LA-540274.

REQ	IDENTIFICATION NO.	DESCRIPTION	REF DESIG	NOTE	ITEM

STOCK LIST

SUPPLEMENTARY DRAWINGS

SIGNIFICANCE OF SYMBOLS AND ITEM NUMBER SUFFIXES

B—PARTIAL ASSEMBLIES OR OTHER DRAWINGS WITH STOCK LISTS
D—PARTS SHIPPED LOOSE
} ITEMS NOT SPECIFIED AS "B" OR "D" PARTS IN ITEM COLUMN ARE INDIVIDUAL ("A") PARTS.

WHERE ITEMS HAVE REFERENCE DESIGNATIONS, THEY MAY BE USED IN LIEU OF ITEM NUMBERS ON THE DELINEATION.
✓ IN "REQ" COLUMN OF STOCK LIST—QUANTITY AS REQUIRED
✓ IN "REQ" COLUMN OF SUPPLEMENTARY DWG LIST—DRAWING REQUIRED
⊗ DENOTES MANUFACTURE DISCONTINUED
⊠ DENOTES MANUFACTURE LIMITED
AB—DENOTES APPARATUS BOOK DRAWINGS

DIMENSIONS UP TO AND INCLUDING 72 INCHES EXPRESSED IN INCHES. NON-LIMITED DIMENSIONS, OTHER THAN SIZE OF RAW MATERIAL, SHALL BE HELD WITHIN FRACTIONAL DECIMAL

DWG SIZE 6S

A-

DRAWN	G.A. SANDER	2-21-56	CAJ
DRAWN	M.D. HOLMAN	6-11	CLB
ISSUE 1	2-21-56	DMK	

ISSUE 1 / LA-567970

211 TYPE HAND TEL SET CORDING & WIRING DIAGRAM

SCALE ~

WESTERN ELECTRIC CO. INC. ENGINEER OF MANUFACTURE

BELL TELEPHONE LABORATORIES, INC

LA-567970